FUNERAL TRAIN

DRAWER 15

SERVICES ENROUTE

The Assassination of Abraham Lincoln

The Funeral Train

Excerpts from newspapers and other sources

From the files of the

Lincoln Financial Foundation Collection

POSTPONEMENT OF THE NATIONAL FAST.

By the President of the United States.

A PROCLAMATION.

Whereas, by my proclamation of the 25th instant, Thursday, the 25th day of next month, was recommended as a day for special humiliation and prayer in consequence of the assassination of Abraham Lincoln, late President of the United States. But whereas, my attention has been called to the fact that the day aforesaid is sacred to large numbers of Christians as one of rejoicing for the ascension of our Saviour:

Now, therefore, be it known that I, Andrew Johnson, President of the United States, do hereby suggest that the religious services recommended as aforesaid should be postponed until Thursday, the first day of June next.

In testimony whereof I have hereunto set my hand and caused the seal of the United States to be affixed.

Done at the City of Washington, this 28th day of April, in the year of our Lord 1865, and of the Independence of the United States of America the eighty-ninth. ANDREW JOHNSON.

By the President:

W. HUNTER, Acting Secretary of State.

THE PRESIDENTIAL FUNERAL TRAIN. *Cleveland, Ohio, 28th.* Everywhere after leaving Buffalo were seen lanterns, mourning flags and mottoes of grief. At Dunkirk the platform of the station was elaborately decorated, and festoons of evergreen extended along the eves of the building. Flags, interlaced with crape, were also exhibited. Thirty-six young ladies in white, with black scarfs, represented the States. Bells were tolled and minute guns fired.

At Westfield five ladies, including the wife of Col. Drake, who was killed at Cold Harbor, brought in a cross and wreath of flowers. On the former were the words: "Ours the cross; thine the crown." All were affected to tears.

At Ripley, General Dix and staff took leave of the funeral party.

At the various places passed, crowds were assembled manifesting unabating interest.

At Wickliffe, Ohio, Governor Brough and staff came on board, also Gen. Hooker and staff, Senator Sherman, and many others of the committee to meet the remains.

Cleveland was reached at 7 o'clock in the morning. All places of business are closed today, and flags are at half-mast. A national salute of thirty-six guns was fired, and half-hour guns until sunset. The coffin was placed in a hearse, the roofing of which was covered with the National flag, with black plumes and otherwise tastefully adorned. The military escort embraced General Hooker and staff, Governor Brough and a civic escort. It was followed by United States civil officers, veteran soldiers, City Councilmen, Knights Templars, Masons, Odd Fellows, Fenian Brotherhood, Temperance Societies and citizens.

The sidewalks were densely crowded and emblems of mourning everywhere prominent, together with expressive mottoes. In the Park a building had been erected expressly for the reception of the remains, to which they were conveyed. The catafalque consists of a raised dais. The coffin rests on this, two feet above the floor. On the four corners stand columns draped and wreathed with evergreen and white flowers. Black cloth falling as curtains, fringed with silver, is looped back to these columns. The floor and sides of the dais are covered with black cloth. There are many other decorations, and the whole affair is very beautiful.

The religious services, performed by Bishop McIlvaine, were intensely solemn, and moved many of the listeners to tears.

The number who witnessed the remains during the day, averaged 180 a minute. Two rows of spectators were constantly passing. The coffin lid was freshly covered with flowers presented by the Soldiers' Relief Association.

Charles L. Wilson, on behalf of the Committee of One Hundred from Chicago, is here today to extend the hospitalities of that city. The Committee will proceed to Michigan City to meet the remains, and will escort them to Springfield. The display at Chicago will be the largest ever known there. Forty-one organizations, numbering 25,000 men, have already reported to the Chief Marshal.

We leave Cleveland at midnight and will arrive at Columbus in the morning. Everywhere deep sorrow has been manifested and the feeling seems, if possible, to deepen as we move westward.

Governor Brough has tendered the hospitalities of his residence to the funeral party.

STATEMENT OF SERGEANT BOSTON CORBETT. On Tuesday afternoon my superior officer, Lieut. Edward P. Doherty, received information that two persons, answering to the description of Booth and his accomplice Harold, were concealed in a barn on the place of Henry Garrett, about three miles from Port Royal, in the direction of Bowling Green. There we captured a man named Jett, who ferried Booth and his companion across the Potomac. At first he denied knowing about the matter; but when threatened with death if he did not reveal the spot where the assassins were secreted, he told us where they could be found, and piloted us to the place.

Booth and Harold reached the barn about dusk on Tuesday evening. The barn was at once surrounded by our cavalry, and some of our party engaged in conversation with Booth from the outside. He was commanded several times to surrender, but made no reply to the demand save that "If you want me you must take me." When first asked to surrender he asked, "Who do you take me for?" A short time afterward, in response to the question as to whether there was anybody else with him in the barn, he stated that he was the only person in the building—that his companion, Harold, had taken another direction, and was beyond the reach of capture.

At three o'clock, or a little after, the barn was fired. Before the flames were kindled Booth had the advantage of us in respect to light. He could see us but we could not see him. But after that the tables were turned against him; we could see him plainly but could not be seen by him. The flames appeared to confuse him, and he made a spring toward the door, as if to attempt to force his way out. As he passed by one of the crevices in the barn I fired at him. I aimed at his body; I did not want to kill him; I took deliberate aim at his shoulder, but my aim was too high. The ball struck him in the head just below the right ear, and passing through, came out about an inch above the left ear. I think he stooped to pick up something just as I fired. That may probably account for his receiving the ball in the head. I was not over eight or ten yards distant from him when I fired. I was afraid that if I did not wound him he would kill some of our men. After he was wounded I went into the barn. Booth was lying in a reclining position on the floor, I asked him:

"Where are you wounded?"

"He replied, in a very feeble voice, his eyeballs glaring with a peculiar brilliancy:

"In the head. You have finished me."

He was then carried out of the burning building into the open air, where he died in about two hours and a half afterwards. About an hour before he breathed his last he prayed for us to shoot him through the heart and thus end his misery. His sufferings seemed to be intense. Booth, although he could have killed several of our party, seemed to be afraid to fire. Mine was the only shot fired on either side. When he fell he had in his hand a six-barrelled revolver, and at his feet was lying a seven-shooter, which he dropped after he was wounded. Two other revolvers were also near him. He declared that the arms belonged to him, and that Harold had nothing to do with the murder. We gave him brandy, and four men went in search of a doctor, whom we found about four miles from the scene of the occurrence. But when the doctor arrived Booth was dying. He did not talk much after receiving his wound. When asked if he had anything to say, he replied:

"I die for my country," and asked those standing by to tell his mother so. He did not deny his crime.

[From the Phila. Inquirer of Monday morning.]

JUNIUS BRUTUS BOOTH.—THE FULL PARTICULARS OF HIS ARREST. We published yesterday a statement of the arrest, in this city, of Junius Brutus Booth, a brother of the assassin of President Lincoln. We append the following particulars connected with the affair, which we know to be a true version of the story:

An order for the arrest of Booth was received by telegraph, from the authorities at Washington, and its execution was intrusted to Isaac M. Krupp, Special Agent of the Fourth District of Philadelphia. About 3 o'clock on Tuesday afternoon, Mr. Krupp proceeded to the residence of a relative of Booth's, in the western part of the city, where he (Booth) was stopping, and, after obtaining an interview with him, informed him that he had a warrant for his arrest in irons, and instructions to convey him to Washington.

Booth seemed for a moment dumbfounded at the announcement, but soon after said: "Do you know if it is in regard to that letter?" The officer not being there to answer questions, gave him no satisfaction, but informed him that although he had authority to take him in irons, he would dispense with the use of them. Booth thanked him, and in a state of considerable agitation prepared to leave the house at once. The twain proceeded on foot to the Station House, 13th and Brandywine streets, where Booth remained for several hours. While there he employed part of his time in copying extracts from the Bible, some of which were from the Forty-ninth Psalm. He appeared at times wrapped in thought and somewhat dejected. During the evening he was conveyed in a carriage to the Baltimore depot, and left in company with officer Krupp in the 11 o'clock train.

He had little to say during the trip, but at one time remarked that he "wished John had been killed before the assassination, for the sake of the family name," &c. Arriving at Washington at 6 1-2 A. M. on Wednesday, he was furnished with a good breakfast, and at 9 o'clock was taken to the War Department. During a brief examination before the Judge Advocate, Booth stated that the published accounts of the contents of the letter alluding to the oil business contained a different phraseology from what he he had written, and he desired to have the whole letter published After the interview at the War Department he was taken to the Old Capitol prison, where he was safely quartered at five minutes of 4 o'clock, having been kept at the War Department for several hours. Officer Krupp returned to this city yesterday, and sent by Adams Express a quantity of clothing, &c., to Booth, at his particular request.

Mr. Booth arrived in Philadelphia on Wednesday last, from Cincinnati, and kept his apartment closely until the time of his arrest. On arriving in the city, he notified United States Marshal Millward of his presence and was visited by that official or some of his deputies, but not interfered with. Before the arrest Booth frequently spoke of the oil letter. Speaking of the name of "Alice" mentioned in it, he said he merely added a postscript in his letter to the assassin, requesting him to give his love to her, as the lady in question had frequently sent him such tokens in her correspondence. "Alice" is believed to be an actress employed in one of the theatres in Washington.

There does not appear to have been anything unusual in the manner or demeanor of Junius during his stay in this city, but he seemed at times concerned about what he calls the false construction put upon the letter in question. Immediately before his arrest he was calm and apparently unconcerned and quietly engaged in smoking, evidently not anticipating any molestation.

SUICIDE OF A SUSPECTED CONSPIRATOR. *Baltimore, 28th.* The suicide of a well-known citizen, with subsequent events, induces a suspicion that he was implicated in the recent conspiracy, and his body has been sent to Washington. The affair occasions much speculation.

From Yesterday's Second Edition

A RICHMOND BANK NOT ROBBED BY THE REBELS.

THE GREAT CONSPIRACY.

BOOTH'S BODY PUT IN OBSCURITY.

New York, 28th. The Commercial's Washington despatch says the vaults of the Farmers Bank in Richmond have been opened and the contents found to be undisturbed.

At a cabinet meeting today all international questions, likely to arise from the conspiracy alleged to have extensive ramifications, were considered.

President Johnson was loudly cheered today while passing through the streets.

Booth's body has been placed where it never will be seen by mortal eye again.

THE FUNERAL AT SPRINGFIELD, ILLINOIS.

Springfield, Ill., 28th. The time of the funeral of the late President Lincoln has been changed from Saturday, the 6th, to Thursday, May 4th.

MONON TRAIN CARRIED BODY OF LINCOLN

Special Train From Indianapolis To Chicago Was Used.

An interesting itinerary of the special funeral train for the escort of the remains of President Abraham Lincoln from Indianapolis to Chicago by way of Lafayette, April 30-May 1, 1865, is the highly prized possession of William A. Callison, superintendent of motive power of the Monon railroad.

Just 62 years ago last Saturday the special train bearing the body of the emancipator left Indianapolis at 11 o'clock at night and it arrived in Chicago at 11 o'clock a m. May 1. The funeral train passed through Lafayette at exactly 3:45 o'clock on the morning of May 1, 1865, and in connection with its visit here the old Lafayette Daily Journal of Tuesday, May 2, 1865, had the following brief story of interest: "The remains of the late president passed through this city at 3:45 yesterday morning. A large concourse of people gathered at the Market-space and in silence witnessed their passage. Large bonfires lighted up the darkness of the night as the train slowly passed.

The band attached to Donaldson troupe, which happened to be in the city, voluntered to play a dirge, which added to the solemnity of the scene."

The train went by Michigan City to Chicago, a total of 209 miles, which required 11 hours, an average of only 19 miles an hour. The rules and regulations of the movement of the train as contained in the intinerary are very much of a departure from the present day methods of handling trains, the most important of which are as follows:

"1. The figures in table represent this time upon which the pilot engine is to be run; and the funeral train will follow, leaving each station ten minutes behind the figures of this table.

"2. The funeral train will pass stations at a speed not exceeding five miles per hour, the engineman tolling his bell as the train passes through the station and town.

"3. Telegraph offices on the entire route will be kept open during the passage of the funeral train and as soon as the train has passed a station the operator will at once give notice to that effect to the next telegraph station.

"4. The pilot engine will pass no telegraph station without first getting information of the funeral train having passed the last preceding telegraph station, coming to a full stop for that information, if necessary.

"6. The engineman in charge of pilot engine will carry two red lights in the nights, and an American flag, draped during daylight, at head of the engine indicating that a train is following and will also provide themselves with proper red lights, flags, and extra men, to give immediate notice to the funeral train in case of meeting with anything on the route causing delay or detention."

The orders were signed by W. F. Reynolds, president of the L. and I. now the Big Four; B. F. Masten, superintendent of the Louisville, New Albany and Chicago, now the Monon, and R. N. Rice, general superintendent of the Michigan Central railroads. The former was a resident of Lafayette at that time. The record which Mr. Callison prizes very much is a copy of the original order for the movement of the train, preserved in a museum in Washington.

The train was handled over what is now the Big Four from Indianapolis to Lafayette; what is now the Monon from Lafayette to Michigan City, thence over the Michigan Central to Chicago.—Lafayette Journal.

Bloomington [illegible]
[illegible] 14 [illegible]

Funeral Train under Escort

With a Nation's Tribute

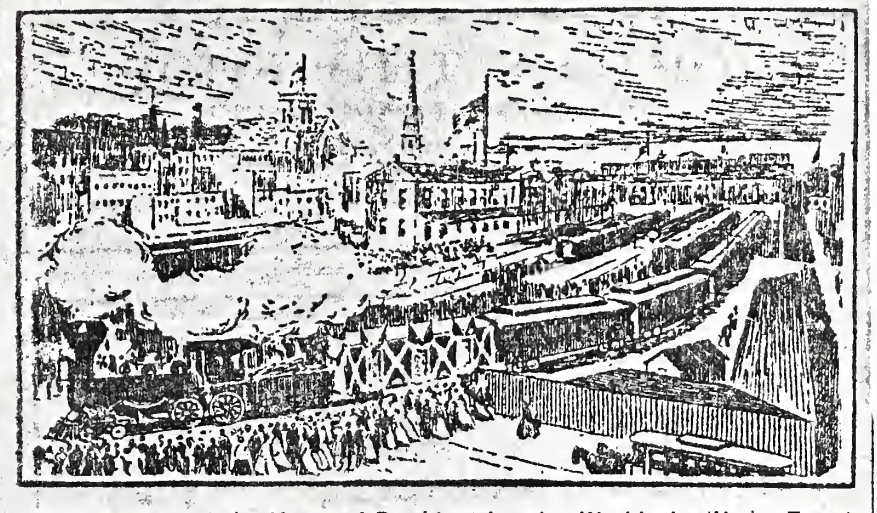

Funeral Train of the Martyred President Leaving Washington Under Escort.
[From an Old Print.]

The splendor of the ceremonials which aggrandize living royalty as much as they glorify dead heroism was wholly wanting in the obsequies of Mr. Lincoln. No part was taken by the government except the provision of a suitable military escort. All beyond was the spontaneous movement of the people. For seventeen hundred miles, through eight great states of the Union whose population was not less than 15 million, an almost continuous procession of mourners attended the remains of the beloved President. There was no pageantry save their presence. There was no tribute but their tears. They bowed before the bier of him who had been prophet, priest and king to his people, who had struck the shackles from the slave, who had taught a higher sense of duty to the free man, who had raised the nation to a loftier conception of faith and hope and charity.

San Francisco Exam 2-12-21

60 YEARS AGO TODAY

APRIL 27, 1865.

SYRACUSE, N. Y.—President Lincoln's funeral cortége, which left Albany at 4 p. m., has reached this city. At every place since leaving Buffalo thousands have waited at the depots for a chance to view the train. Everywhere was evidence of the deepest mourning. At Albany the remains lay in state in the capitol and were viewed by thousands.

TELLS INTERESTING STORY

Engineer of Lincoln's Funeral Train Relates Incidents of Long Journey of Sorrow

'28

REDLANDS, Feb. 9.—George Wrightson, engineer in charge of the engine which pulled the train carrying the body of Abraham Lincoln from Washington to Springfield and who is now 86 years old, told the members of the Rotary Club today all about the trip.

He said that he decorated the engine and the cab with flags and with black bunting. Then he wired a framed picture of Abraham Lincoln to the front of the engine and draped flags around it. The next thing he did was to lash the bell of the engine so it could not move and then fix a wire to the clapper.

"In this way I tolled the bell all through the cities and many newspapers commented on it," he said.

"I counted eight and then pulled the wire, then eight and pulled again. We traveled very slowly and there were great crowds all along the way. There were guards at all cross roads and there was great fear expressed that the train might be ditched."

Mr. Wrighton said that the train moved through lines of sorrowing people. He said that the train had the first Pullman cars ever run on the New York Central lines. There were four Pullmans, a diner and the car in which the body of Lincoln was placed.

"I am just as young as I ever was except for my eyes," boasted the man who for fifty-three years rode in the cab of New York Central engines.

"California for me. One of these big Santa Fe engines could not pull me [illegible]

FAMILY HISTORY REPEATS SELF

Son of Lincoln's Engineer Pilots Coolidge Train to Gettysburg

128

GETTYSBURG (Pa.) May 30. (AP)—The engineer of the special train which brought President Coolidge and his party to Gettysburg from Washington today was Grant Eckert, son of John Eckert, who piloted the train which carried President Lincoln to Gettysburg just sixty-five years ago for his memorable address.

The engineer of the Coolidge special was celebrating his 64th birthday. Ordinarily this is his day off, but he gave it up to make the run.

Lincoln presented the elder Eckert with a gold watch as a token of appreciation for his

FEB. 12 NOTABLE DAY FOR B. & O. RAILROAD

Meeting to Organize Road Held 100 Years Ago To-Day in Baltimore.

Long before the country had reason for commemorating Feb. 12, the anniversary of the birth of Abraham Lincoln, it was a memorable date in its transportation annals, because on that day in 1827 the first formal meeting was held in the city of Baltimore to organize the Baltimore & Ohio Railroad company. The proceedings of the meeting of Feb. 12, 1827, record that it was "to take into consideration the best means of restoring to the cit. of Baltimore that portion of the western trade which has lately been diverted from it by the introduction of steam navigation and by other causes. William Patterson was appointed chairman and David Winchester secretary. Various documents and statements had been submitted to show the efficiency of railroads "for the conveying of articles of heavy carriage at a small expense," and "the superior advantage of this mode of transportation over turnpike roads or canals."

Abraham Lincoln and the Baltimore & Ohio first come together in 1856, when Lincoln, then an attorney at Springfield, Ill., became counsel for the Ohio & Mississippi, which is now ar important part of the Baltimore & Ohio lines from Cincinnati to St. Louis. Mr. Lincoln came into direct contact with the Baltimore & Ohio on Washington's birthday, 1861, when he used the line from Baltimore to Washington in going to his inauguration. The civil war forced Mr. Lincoln to commandeer the Baltimore & Ohio and John W. Garrett, president of the company at that time, came into frequent association with him. The body of Lincoln left Washington over the Baltimore & Ohio for burial at Springfield, Ill.

A Query About President Lincoln's Funeral Train

Can any of the older Pullman people or our railroad friends, help illumine a question about the funeral train of President Abraham Lincoln?

Mr. J. B. Hill, President of the Nashville, Chattanooga & St. Louis Railway, heard that a locomotive of his company named the "Nashville" hauled the train on part of its journey from Washington to Springfield, Ill. Mr. Hill appealed to the Pullman company for information, and investigation has included the company's archives and the Lincolniana of the Chicago public library, Chicago Historical society, and the Abraham Lincoln association of Springfield, all without answering Mr. Hill's question. President Carl Gray of the Union Pacific, and Baltimore & Ohio authorities on these subjects, were appealed to in vain.

Meanwhile Mr. Hill, digging into the records of his company, became convinced that it did own a locomotive named "Nashville," but that this seems to have been a switching locomotive, perhaps dismantled in 1864 or 1865. Some locomotives of the N., C. & St. L. were taken north late in the war; and the B. & O. records show that a different locomotive handled the train over each division of road. The route was Washington, Baltimore, Harrisburg, Philadelphia, New York, Albany, Buffalo, Cleveland, Columbus, Indianapolis, Chicago, and, finally, Springfield, Ill. Photographs of the train and of various locomotives that hauled it have been found but none identifies the "Nashville." The historic old *Pioneer*, first sleeper built in the modern manner, was attached to the train and occupied by members of the funeral party. The accompanying illustration shows the train on the Illinois Central tracks on the lake front at Chicago, just before leaving for Springfield.

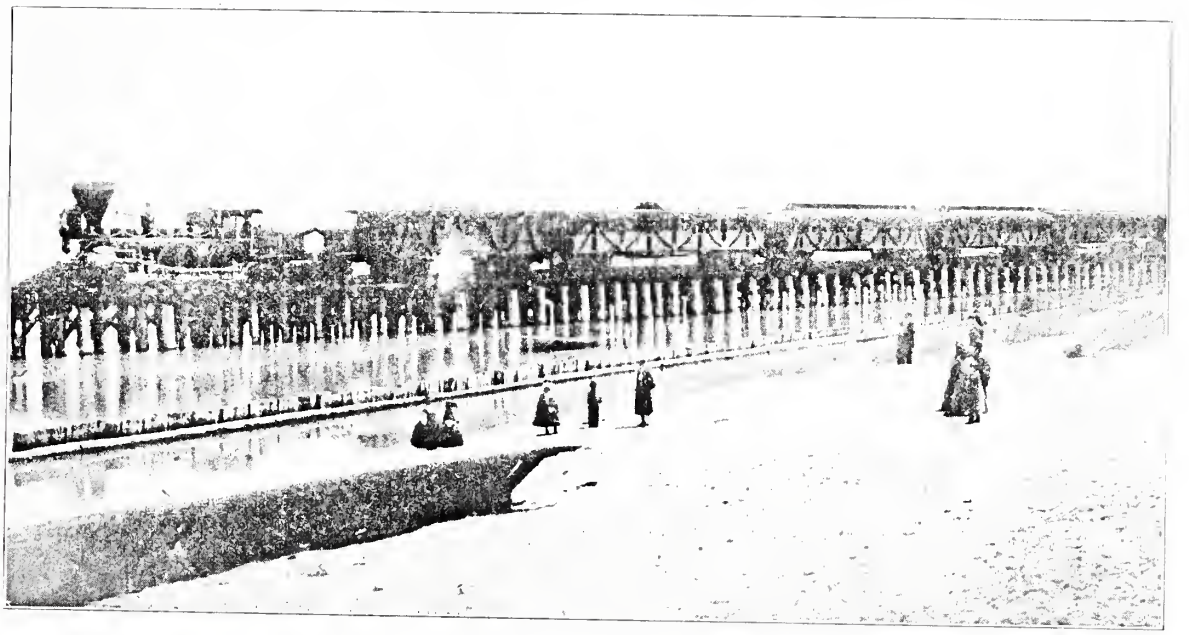

The Lincoln Funeral Train on the Lake Front, Chicago

Pilot Recalls Run of Lincoln's Funeral Train

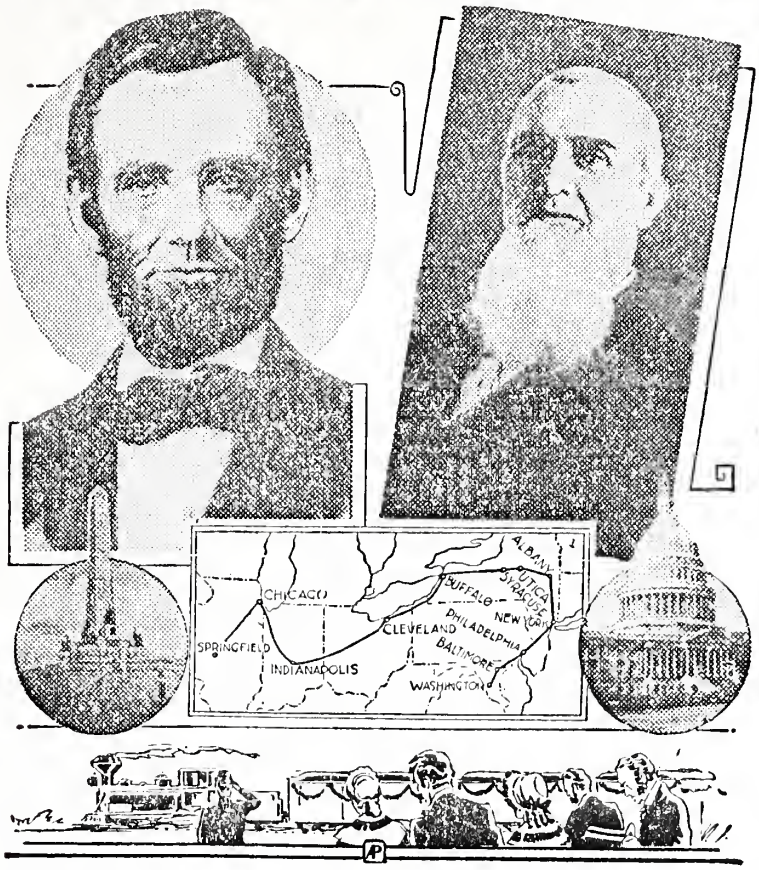

(Photo by A. P., Boston Traveler)

George W. Wrightson (right) believes he is the last of engineers who piloted Lincoln's funeral train over the route shown in map. Lincoln is shown as he appeared when President.

Wrightston Believes He Is Last of Six Engineers to Take Car Containing Body from Washington to Springfield

REDLANDS, Cal., Feb. 12 (AP)—Shrouded in black bunting and draped with American flags, a sable train rolled slowly over the New York Central tracks from New York to Utica between lines of silent, grieving people.

WITH LINCOLN'S BODY

One of the cars carried the body of a slain president, Abraham Lincoln.

In the engine cab of the funeral train, slowly tolling the bell as the miles passed, sat George W. Wrightson, who now believes he is last of six engineers, picked for ability, who piloted the train from Washington to Springfield.

At each switch, Wrightson peered cautiously from his cab. Each switch had been spiked, to prevent tampering until the train had passed. The cortege was given right of way over all other traffic.

"When we reached the depot at Syracuse, the train was greeted by the most impressive demonstration I have ever seen," Wrightson recalls.

"The train shed was covered with the national colors and black festoons. An immense, silent throng had waited hours to glimpse the cortege."

FIVE CARS IN TRAIN

There were five cars in the train, carrying members of the Lincoln family, government officials, the casket and newspaper men. They were the first Pullmans to run on a New York Central track.

The front of the engine bore a portrait of the martyred President. At sight of the picture and the draped locomotive, throngs along the track drew back. Some waved small flags. Others wept openly. When the train had passed they stepped to the track and watched it fade into the distance.

Wrightson, 88, is nearly blind and retired from railroading after 53 years' service.

Funeral Train

CONDUCTOR DIES; CARRIED LINCOLN

Elias Toy, Ex-Pennsy Employe, Was 90.

Elias Toy, conductor of the Pennsylvania Railroad train which carried Abraham Lincoln's body from this city to New York in 1865, died yesterday at his home, 9427 Bustleton ave., Bustleton. He was 90.

Mr. Toy entered the service of the railroad in 1863. He retired in 1913. He was the oldest member of Jerusalem Lodge, F. and A. M., and had lived in his Bustleton home for 60 years.

He is survived by two daughters, Mrs. Charles H. Heyer, of 9510 Bustleton ave., and Mrs. Louise H. Farrell, with whom he made his home.

Funeral services will be held Thursday from St. Luke's Episcopal Church, Bustleton.

Phila Ledger

Man Who Rode with Lincoln's Body Dies

Special to NEWARK NEWS.

TEANECK—George B. Mitchell, 89, steward of the Cliffside Park Elks Club, sixty-five years in the employ of the New York Central Railroad died yesterday in Holy Name Hospital. He will be buried Saturday in Calvary Cemetery, Grantwood.

Mitchell enjoyed the distinction of having been a member of the train crew which transported the body of President Lincoln when it was brought to New York to lie in state.

Mitchell was born in Chatham, N. Y., June 18, 1844, and entered the employ of the railroad company in 1866. He served as trainman, yardmaster and passenger conductor. He was claim agent for the old Adams Express Co. and had been employed by the New York Edison Co.

He is survived by two daughters and two sons. They are Mrs. Herbert Scheler and Mrs. M. A. Marshall of Grantwood and Asa and George F. Mitchell.

Newark Evening News 1-14-32

A Night of 1865.

Let me close with the memory of a night of the spring of the year 1865, in the time of the blooming lilacs, as says the wonderful poem. I was waiting in Philadelphia for Lincoln's funeral train to start, as it was my duty to accompany it to Newark. I had and have little desire to look upon faces from which the light of life is departed; but suddenly it came upon me that I had never seen the great president, and must not let go by this last opportunity to behold at least the deserted temple of a lofty soul. To my grief I found it was too late; the police had drawn their line across the path in front of Independence hall. But my earnest desire prevailed, and I was the last to pass in the window and behold, in a sudden dazzle of lights and flowers, the still features of that face we all now know so well.

Then I went my way into the night and walked alone northward to the distant station. Soon I heard behind me the wailing music of the funeral dirge. The procession approached—the funeral train moved out beneath the stars. Never shall I forget the groups of weeping men and women at the little towns through which we slowly passed, and the stricken faces of the thousands who, in the cities, stood like mourners at the funeral of a beloved father. Thus, as came the dawn and the full day, through grieving states was borne the body of the beloved chieftain, while the luminous spirit and example of Lincoln the Leader of the People went forth into all the earth along the pathway of eternal fame.—Century Magazine.

Lincoln Funeral Trainman Dies

Sunbury, April 12.—(AP)—Theodore D. Stainer, 86, retired Pennsylvania Railroad employe, who was a member of the crew of Abraham Lincoln's funeral train, died yesterday.

Gazette 4/12/31

The will of Elias Toy, retired Pennsylvania Railroad employee who was conductor of the train which carried Abraham Lincoln's body from Philadelphia to New York in 1865, leaves his $10,000 estate to his two daughters, Mrs. Ella T. Farrell and Mrs. Elizabeth T. Heyer, and other relatives. Mr. Toy died August 22, 1932, at his home 9427 Bustleton ave., Bustleton. He was in his 90th year. The $10,000 estate is equally divided between personalty and realty. Gifts of $1000 each are made to three grandchildren and another $1000 is divided between a daughter-in-law and a great-grandchild.

Inquirer 2-1-33

He Knew Lincoln.

(From Leslie's.)

Ask any engine driver in the East who Jim Hunt is, and he will say, "Who—Jim? Why, he's the man that brought Abe Lincoln from Schenectady to Albany. He'll tell you about it if you'll go to Albany." Jim Hunt is seventy-five years old. He was an engineer on the New York Central while the present generation of locomotive drivers were playing in the clinkers in the train yards. When he is not playing pinocle with the firemen of Steamer No. 7, he is telling how Abe Lincoln looked when he stood on the platform of his car and watched the crowds that came to meet him all along the seventeen miles from Schenectady to Albany. Jim says he felt proud that day. "My engine was Erastus Corning, Jr., No. 47. She was n't very big. You could put her in the tender of these fellows running now, but she was as sleek and smooth as your pet cat." The firemen of No. 7 have bought him a wheel chair, which he can run by turning two cranks. They put a bicycle light on it for a headlight, and every morning, on this go-by-hand locomotive, he goes from his home to the engine house, where he sits all day telling stories of railroad life in the early sixties.

The New York Times
Reg. U. S. Pat. Off.
"All the News That's Fit to Print."
Published Every Day in the Year by
THE NEW YORK TIMES COMPANY.
ADOLPH S. OCHS, President and Publisher.
B. C. Franck, Secretary.

SATURDAY, NOVEMBER 8, 1930.

Lincoln Funeral Train Engineer Dies

Special to The New York Times.

REDLANDS, Cal., Nov. 7.—George W. Wright, 88 years old, who drove the Lincoln funeral train over the Utica-Syracuse division of the New York Central, died here today. He left a daughter, Mrs. Addie Boyle of New York, and two other daughters here.

Harrison's Secretary Dies in Jersey at 95

LEONIA, N. J., Feb. 27 (A. P.).—Lieut. Col. Elijah W. Halford, retired U. S. paymaster, secretary to President Benjamin Harrison and a reporter on the funeral train of President Lincoln, died yesterday. He was 95.

Secretary to Harrison from 1888 to 1892, he retired as paymaster in 1907.

When the train bearing the assinated President Lincoln passed through Indiana, Halford, then a reporter for the Indianapolis Journal, was on it.

Post 2-1-33

Passage of Funeral Train through Philadelphia in 1865

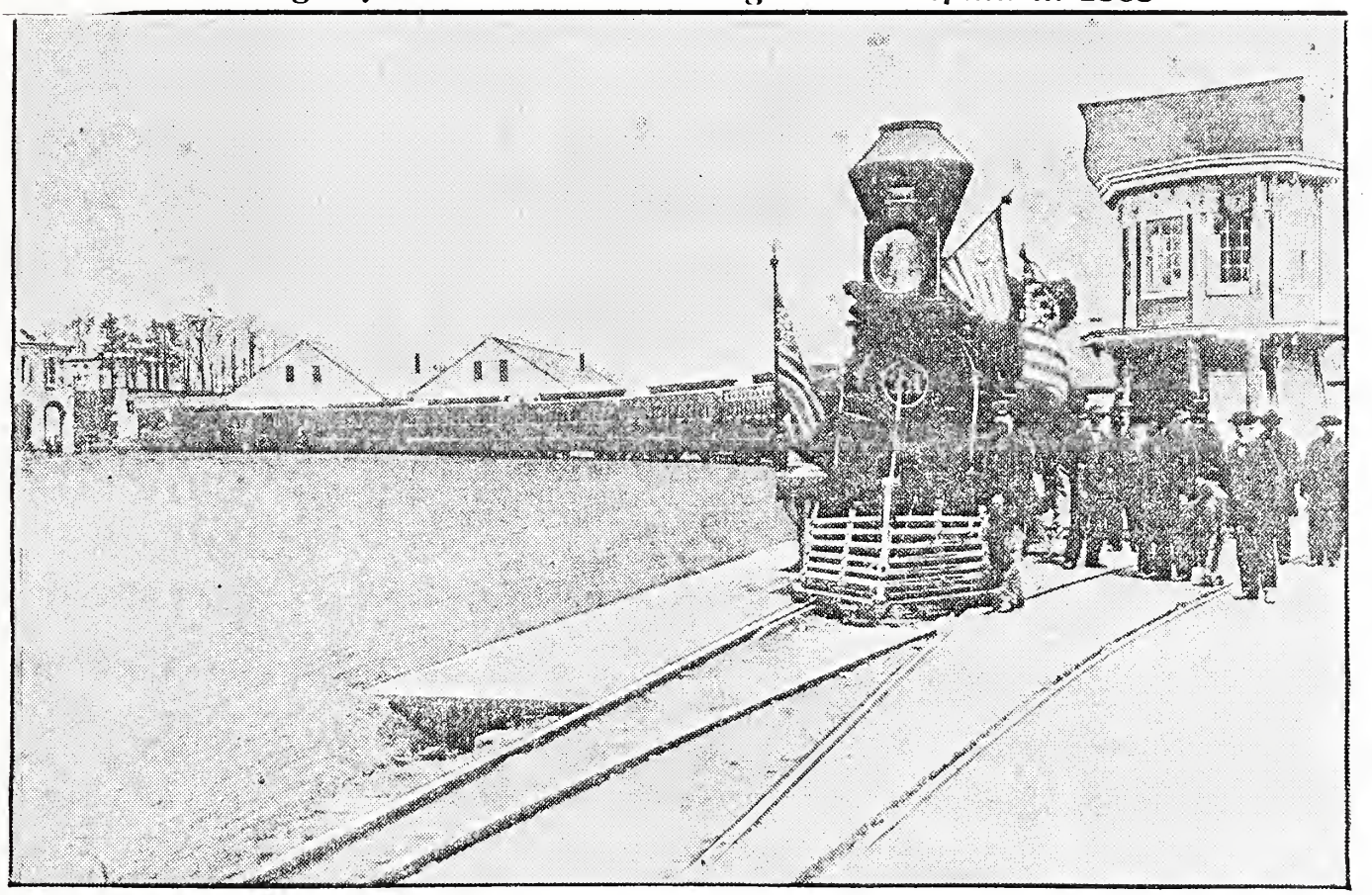

Lincoln's Funeral Train at W. Phila. station of the P. W. & B. on April 22, 1865. Frame structures to left rear are railroad shops. Extreme left is Woodlands, the old mansion which still stands in Woodlands cemetery. In those days, trains crossed bridge at that point and moved down Prime st. (now Washington av.) to Broad st. The old station there now is the Pennsylvania Railroad freight station. From there the casket was carried to old Kensington station and put on a train for New York.

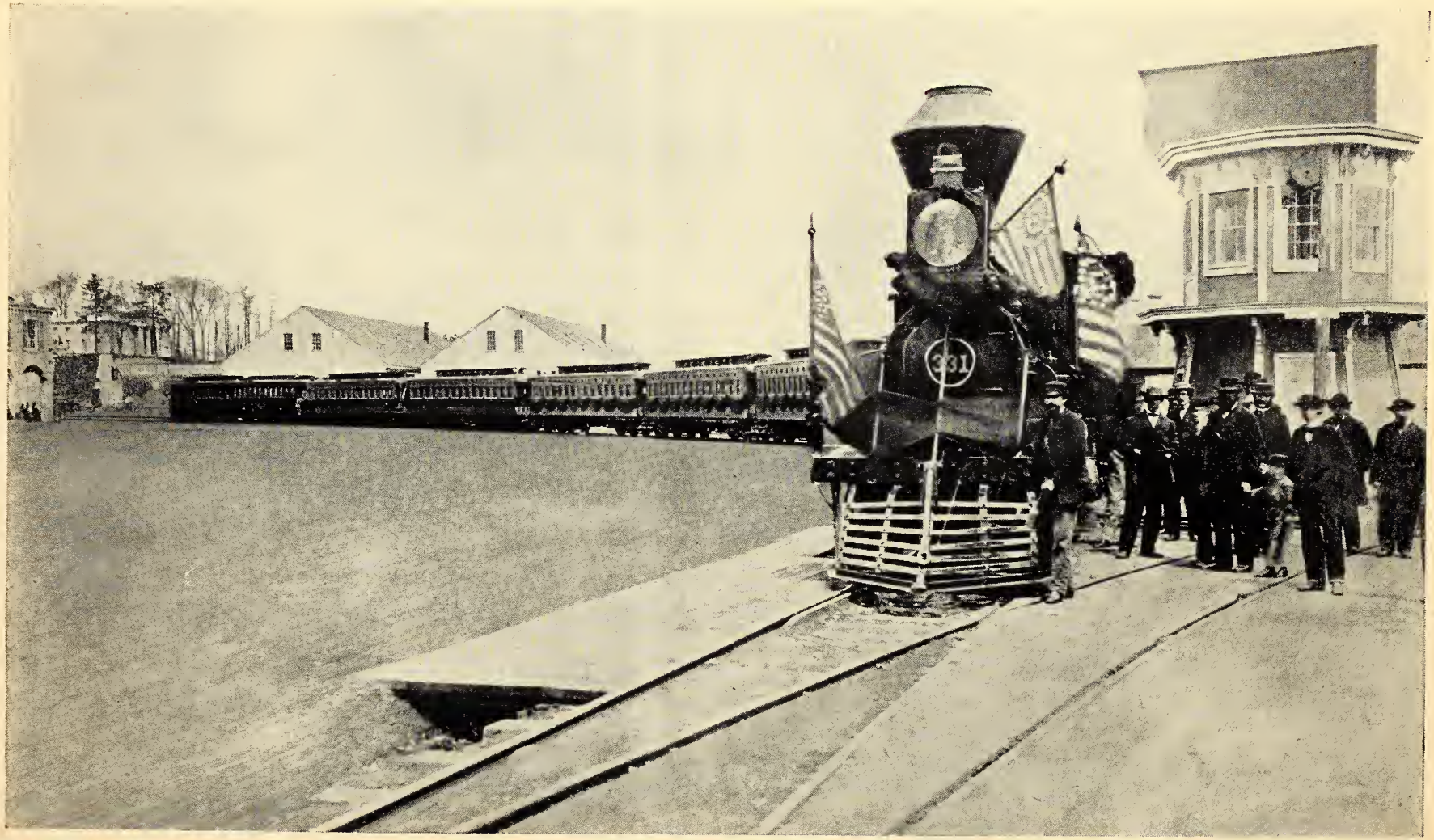

Lincoln's funeral train, comprising seven cars for the funeral party, one for the guard of honor and one for the coffin, is here shown just outside Philadelphia toward the start of its 13-day, 1,600-mile journey from Washington to Springfield. Of the original cars, only those bearing the coffin and the guard reached Springfield. The rest were displaced time & again by the 13 railroads which divided the prestige of the trip. With Lincoln's body traveled that of his son Willie who had died at 12 two years before.

Lincoln's funeral train, comprising seven cars for the funeral party, one for the guard of honor and one for the coffin, is here shown just outside Philadelphia toward the start of its 13-day, 1,600-mile journey from Washington to Springfield. Of the original cars, only those bearing the coffin and the guard reached Springfield. The rest were displaced time & again by the 13 railroads which divided the prestige of the trip. With Lincoln's body traveled that of his son Willie who had died at 12 two years before.

Lincoln's funeral progress was the most extravagant demonstration of national grief in American history. As the funeral train puffed slowly by, crowds lined the tracks day and night. Each black-draped city strained to outdo the rest in mourning. It was estimated that 7,000,000 people saw the coffin or hearse, that 1,500,000 filed by the coffin to see the face still discolored by the effects of the fatal bullet.

"The Nashville" was one of the 13 little wood-burning locomotives which hauled the Lincoln funeral party. Note the portrait on front.

The funeral car was entered at almost every stop by 36 young ladies, representing the 36 States, who wept, sang, and spoke pieces.

In Springfield, where Lincoln was finally buried 19 days after his death, this picture of the black-draped Lincoln house was taken a few days before the services. In the street stands Lincoln's horse, Old Bob.

CONTINUED ON NEXT PAGE

Funeral of Great Emancipator Was Day of National Mourning

By BILLY S. GARVIE

Seventy-six years ago Apr. 19, the body of President Lincoln lay in state in Washington as a result of an assassin's bullet.

The day was a day of mourning in every city, town and hamlet in the Union. In Hartford, public buildings and homes were draped in black. Large crowds attended memorial services at noon in several churches.

In Washington thousands filed by the casket where it lay in the East room of the executive mansion. Paying respects were members of the late President's cabinet, governors of several states, congressmen, navy and army officials.

Early on the morning of the 20th a funeral procession that required 1½ hours to pass took the body of President Lincoln to the station. The hearse was pulled by six white horses. Following were regiments of infantry, artillery, cavalry, marines and sailors. Many citizens joined in the line of march.

When the funeral train left for Springfield, Ill., President Lincoln's burial place, a large crowd was at the station.

Crowds were on hand as the funeral train passed through Baltimore, Philadelphia, New York, Albany, Buffalo, Cleveland and Chicago, en route to Springfield, Ill., where the President was buried.

The funeral in Springfield was held on May 4. Burial was in Oak Ridge Cemetery with Capt. Robert Lincoln the only member of his family present as "The Great Emancipator" was placed in a tomb.

LINCOLN LORE

Bulletin of the Lincoln National Life Foundation - - - - - Dr. Louis A. Warren, Editor
Published each week by The Lincoln National Life Insurance Company, Fort Wayne, Indiana

Number 895 FORT WAYNE, INDIANA June 3, 1946

PILOTING THE LINCOLN FUNERAL TRAIN

Many boys of twenty-five years ago or more, who lived in small towns, remember the Memorial Day parades which gave them the opportunity to march in the procession with the tottering members of the G.A.R. As an aftermath of Decoration Day, as it then was called, it would seem timely this year, to compile some facts relating to the first American memorial procession—the funeral train of Abraham Lincoln which passed from the Potomac River to the Prairies.

Possibly the most controversial subject relating to the famous train is the identity of the engineers who piloted it and the names of the engines used to draw the funeral coaches from one metropolis to another. There are some traditions extant holding that but one engine was used for the entire trip. Charles E. Fisher in 1930, then the President of the Railway and Locomotive Historical Society, made this suggestion, "A list of the roads, the locomotives, and the train crews that handled this historic train, together with such photographs as are obtainable, would make a valuable record for railroad history."

This monograph is an attempt to compile such data as may help to some day achieve this end. Although limited space will make it necessary to confine the information to the names of the railroads operating the trains, the names of the engineers and the numbers or names of the locomotives including the pilot engine, under their charge.

WASHINGTON TO BALTIMORE

The Baltimore and Ohio Railroad over whose lines the funeral train first moved has claimed that its famous engine "Number 23" later called the "William Mason," headed the funeral train from Washington to Baltimore. This engine is the same one which brought Lincoln into Washington from Baltimore in 1861 and also was used for part of the Gettysburg trip in 1863. A contemporary news item states, however, that engine "Number 238" drew the train and that it was a new locomotive made at the Mount Clare works. Thomas Beckett was the engineer. "Number 239," the pilot locomotive, was draped in mourning and William Galloway was the engineer.

BALTIMORE TO HARRISBURG

The conductor on the funeral train traveling over the Northern Central Railroad from Baltimore to Harrisburg was William Henry Harrison Gould, but in his reminiscences preserved in 1915 he could not recall the name of the engineer of his train or the engineer of the pilot engine.

HARRISBURG TO PHILADELPHIA

The Pennsylvania Railroad took charge of the train at Harrisburg using engine "Number 331" with engineer John E. Miller as pilot.

PHILADELPHIA TO JERSEY CITY AND NEW YORK

The Camden and Amboy Railroad was utilized to move the funeral train from Philadelphia to Jersey City. Upon arriving there, the funeral car was taken on the ferry boat "New York" to New York City.

NEW YORK TO ALBANY

One of the most picturesque parts of the itinerary was the trip over the Hudson River Railroad as far as Albany. The pilot engine used was the "Constitution" and the engine pulling the train was the "Union," with George W. Wrightson as engineer of the latter.

ALBANY TO BUFFALO

The New York Central Railroad was used to convey the remains from Albany to Buffalo. One of the largest engines on the road, the "Dean Richmond," pulled the funeral train.

BUFFALO TO ERIE

The funeral train left Buffalo over the Lake Shore Railroad, but the Erie and North East Railroad was operating at this time the different roads between Buffalo and Erie.

ERIE TO CLEVELAND

The train from Erie to Cleveland over the Cleveland, Painsville and Ashtabula R.R. used the same personnel as far as possible that had previously manned the train carrying Mr. Lincoln East in 1861. The same engine, the "William Case" was also used, and John Benjamine was the engineer. The "Idaho" served as the pilot engine with J. W. McGuire in charge.

CLEVELAND

Martin Fetter who helped to decorate engine "Number 40" also known as the "Dispatch" claimed it took the train out of Cleveland but it was probably used as a switch engine to move the train as the account states: "The locomotive of the Cleveland and Pittsburgh Railroad, tastefully decorated, took the train in its reverse position and drew it to the Euclid Street Station. The engineer was Bill Simmons.

CLEVELAND TO COLUMBUS

While it is claimed by some authorities that "The Nashville" took the train from Washington to Springfield it did have its share in the task of hauling the coaches. The engine was built at the Cuyahoga Works in Cleveland in 1852 and was operated by the Cleveland, Columbus and Cincinnati R.R. over whose tracks the funeral train moved. The engineer in charge of "The Nashville" was George West and it was preceded by the pilot engine "Louisville" with E. Van Camp at the throttle.

COLUMBUS TO INDIANAPOLIS

In the comment by Mr. Fisher who doubted if "The Nashville" ran all the way to Indianapolis this supposition has been verified in the discovery of a contemporary news notation which states that the funeral train left over the Columbus and Indianapolis Central Railroad with Mr. James Gourley as engineer but the name of the engine and pilot engine and its operator are not given.

INDIANAPOLIS TO LAFAYETTE

While we are under obligation to a reporter of the Indianapolis Journal for much information about the funeral train from the time it left Indianapolis until it reached Springfield he fails to make known certain facts we would like to know about the Indianapolis-Lafayette segment of the trip which was evidently made over the Lafayette and Indianapolis Railroad.

LAFAYETTE TO MICHIGAN CITY

Our reporter for the Journal states in his dispatch dated May 1, Lafayette, Ind., 3:35 A.M.: "The steam engine 'Persian' handsomely decorated now bears us on under the charge of a cautious and experienced engineer Mr. A. Rupert. Mr. Rhodes is engineer in charge of the pilot engine 'Rocket.' The road traveled was the Louisville, New Albany and Chicago Railroad."

MICHIGAN CITY TO CHICAGO

The same reporter in a notation dated May 1, Michigan City, 8:30 A.M. states "The engine 'Ranger' . . . and the pilot engine 'Frank Valkenberg' are ready for our accommodation." These engines conveyed the party over the Michigan Central lines into Chicago.

CHICAGO TO SPRINGFIELD

The depot of the Chicago, Alton and St. Louis Railroad was profusely decorated and over its line the last journey of the lamented President was to be taken. Henry Russell, engineer of the pilot engine "Number 40" was the first to leave the station followed in ten minutes by engine "Number 58" with engineer James Colting at the controls.

Lincoln Funeral Train's Trip Through Lebanon Recalled

Watching from his bedroom window, Frank J. Lee witnessed the unheralded midnight passage of President Lincoln's funeral train through Lebanon en route to Springfield, Ill.

The incident was recalled by the retired Indianapolis lumber company executive yesterday on the eve of his 90th birthday.

"Not many of us knew the President's body was being brought through Lebanon, but I got the tip and stayed up to watch it. Our house was close enough to the railroad that I could see the train and small crowd of Lebanon people gathered around it," Lee, a Lebanon native, explained.

Formerly president of Carter-Lee Lumber Company, Lee was associated with the firm 51 years. Founded by his father, the Carter-Lee Company built the first manufacturing plant on the Belt Railroad in 1873. It was a sawmill and lumber storage warehouse. Lee was educated in Indianapolis public schools and retired from the lumber business in 1935. He lives at 3719 Washington Boulevard with his wife, Mrs. Jennie Lee, who is 85 years old.

THE INDIANAPOLIS STAR
THURSDAY, DECEMBER 4, 1947

FUNERAL

The funeral train conveying the remains of Abraham Lincoln traveled over a 1600-mile route that lasted eighteen days.

Approximately 120,000 people viewed Lincoln's remains in Philadelphia.

It has been estimated that hearly thirty million people attended memorial funeral services held in memory of Abraham Lincoln throughout America.

Lincoln's remains were viewed by more than half a million people before his burial in Springfield.

Lincoln was assassinated on Good Friday.

Lincoln left an estate of $110,294.62.

Lincoln was buried in the suit of clothes that he wore at his second inaugural.

Illinois Benedictine College

5700 COLLEGE ROAD • LISLE, ILLINOIS 60532-0900 • 708/960-1500

January 24, 1994

Dear Civil War Enthusiasts:

A group of us at Illinois Benedictine College are working on a Civil War project that may be of interest to you and for which we are seeking help.

Over the last four years IBC has been collecting material for a traveling exhibit of Abraham Lincoln's Funeral Train which hopefully will tour in 1995 from Washington, DC to Springfield, IL following the same route as the original 1865 train. The enclosed pamphlet describes our project which is partially funded by the Robert R. McCormick (Chicago Tribune) Foundation with a grant of $75,000.

We've been very successful in completing a 1/12 scale model of Lincoln's private coach and even finding the great-great-grandson of the builder of the car with an actual pass to ride the funeral train. Another collector allowed us to borrow a tassel from the private car bunting. We're hoping to collect enough information to make a small, but very good monograph on the train.

I'm writing to many Civil War Roundtable groups to continue our search for some specific items as given in the accompanying list.

We'd also like to find reenactment honor guards who might be interested in working with us at the twelve cities where the exhibit will stop. Interestingly President Lincoln's guards were awarded the Congressional Medal of Honor, only to have them rescinded by Congress in 1916. We will primarily be stopping in major shopping malls and refurbished railroad stations during a five day stay in each city.

We're also looking for local historical societies to join us in sharing each city's Lincoln history.

Thank you in advance for any help with the IBC Lincoln Train.

Sincerely yours,

Wayne Wesolowski, PhD
Professor and Director
IBC Lincoln Train Project

The Lincoln train is coming...

WANTED: INFORMATION
ABRAHAM LINCOLN'S FUNERAL TRAIN

First person accounts, diaries, songs, and especially photos of people who worked on the railroads or were trackside as the train passed. Just family stories about ancestors would be useful.

Unpublished or little known photos and stories about the train.

Local Newspaper accounts about the train trip (We have some of the small towns in Indiana, Ohio and also Chicago). Many cities had cermonies like planting memorial trees as the train passed, some of which still stand.

Information about the Lamson Family of the Toledo, Ohio area whose relative Myron Lamson had his picture taken onboard the funeral car just before it left Washington. In 1929 this family still had a glass plate negative of President's car which we would like to borrow to make a photo mural.

Information about Frank B. Snow of Peoria, IL and his exposition of the President's car at the 1904 World's Fair.

Information about the President's car on the Union Pacific and the Colorado Central RR who used it for an officers' car after 1870 and then just a coach and finally a trackworkers' car.

Information about Thomas Lowery who brought the car to Minneapolis before it was destroyed in a fire in 1911. We have the newspaper account of the fire, but nothing before that.

Reasonable copy costs will be reimbursed. Inquiries to:

Prof. Wayne Wesolowski, Lincoln Train Project,Illinois Benedictine College, 5700 College Road, Lisle, IL 60532

Dr. Wayne Wesolowski with

the 1/12 model of Lincoln's Car

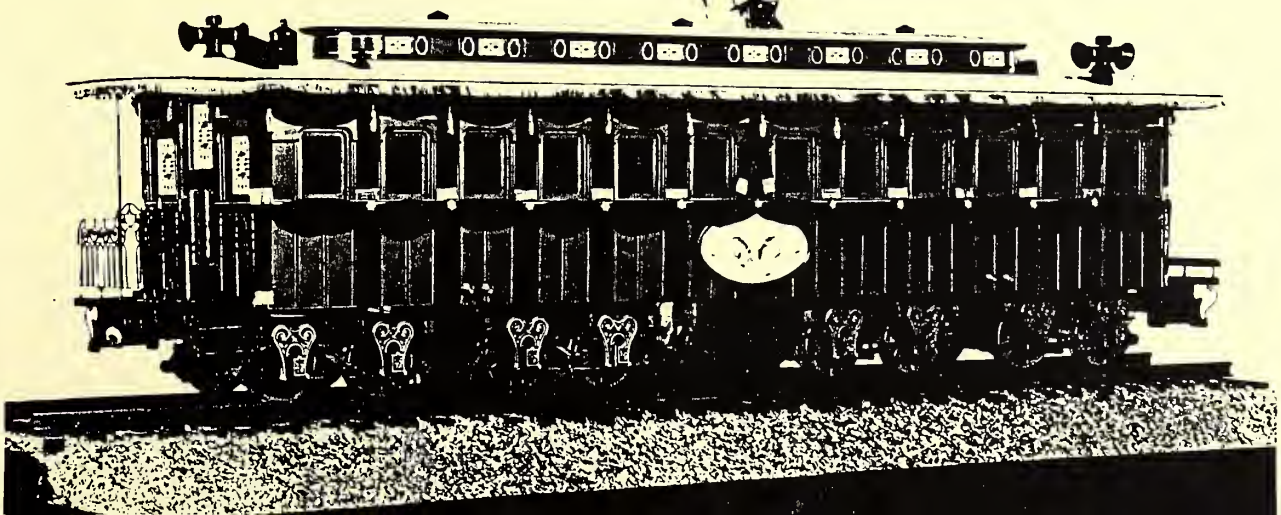

The Lincoln Train

Library of Congress

is coming...

Illinois
Benedictine
College

The year 1995 will mark the 130th anniversary of one of the most dramatic events in American history. At the climax of a devastating civil war, Abraham Lincoln was assassinated. News spread across the nation. With interment being in Springfield, Illinois, the funeral cortege moved by rail from Washington to the final resting place during a three week journey. At trackside in many small towns and large cities the people gathered to pay their last respects to the president who had led them through the terrible war.

There is still an immense public appetite for information on this tragic era in our history as evidenced by the recent resounding success of the PBS series, "The Civil War" and ABC's Kunhardt, "Lincoln" Program.

The private car "United States" and an officers' car decked in bunting for Lincoln's funeral - April, 1865. (Photo courtesy of Buffalo & Erie County Historical Society)

The Lincoln Train Model

To commemorate Lincoln's train as well as provide a public education service, Illinois Benedictine College is creating a Lincoln Train Model and Traveling Exhibit and initiating a national tour of the display for approximately one year.

The exhibit will trace the same route as Lincoln's funeral train in 1865, visiting Washington, Baltimore, Philadelphia, New York, Albany, Buffalo, Cleveland, Columbus, Indianapolis, Chicago and Springfield. The length of stay at each city will vary, depending on the type of site - museum, mall, public building. After an extended Springfield stay, the exhibit will begin short term local tours.

Model Construction

The exhibit will consist of three 1/12 proportion models of the locomotive, "Nashville" and tender, one officers' car, and the presidential car, "United States," surrounded by soldiers, train personnel and the public. In a covered connected acrylic case the 14-foot long exhibit will allow for a large number of simultaneous viewers. A display panel with historical photos, maps and text will accompany the exhibit.

Informational brochures - one a historical description of the Lincoln Train and its journey home and a second on the construction of the model and the hobby of model making will be distributed at each site.

Project Director

Dr. Wayne Wesolowski, nationally recognized for his realistic and detailed railroad models, will be the principal modeler and project director.

Wayne Wesolowski has been building transportation-related models for more than 30 years. A chemistry professor at Illinois Benedictine College, he spends each summer crafting miniature re-creations of industrial railroad scenes. Each exhibit is a special adventure in bringing to life part of American industrial history. Wesolowski's modeling work can be seen at the National Railroad Museum, RailAmerica, the West Chicago Historical Museum and the Chicago Museum of Science and Industry among others.

As writers, Wayne and Mary Cay Wesolowski have more than 135 articles and three books published on model making. Kalmbach Publishing commissioned two commercial video tapes which appear on PBS stations across the country. *Good Morning America* aired a segment as an example of specialized video education.

A 33-year member of the National Model Railroad Association, Dr. Wesolowski frequently lectures on model building to varied groups. Educating through his models, he truly believes that historically accurate models can capture a small piece of reality.

Wayne Wesolowski works with a model of the wheels for President Lincoln's car. More than 725 handmade parts were used. (Photo by Steve Wesolowski)

About Illinois Benedictine College...

Illinois Benedictine College (IBC), founded in 1887 as St. Procopius College, and located in Lisle, Illinois, is a Catholic, coeducational college open to students of all faiths. IBC offers more than 30 undergraduate majors and seven master's degree programs.

Since the late 1960s, Illinois Benedictine College has had a special interest in Abraham Lincoln. Beginning with a large donated Lincoln collection, Thomas Dyba, executive vice president, expanded the collection through the 1970s and 1980s.

In 1987, he established the Lincoln Group of Illinois, basing its operation at Illinois Benedictine College. Housed in the special collections area of the Theodore Lownik Library, the IBC Lincoln Collection focuses on Abraham Lincoln the homeowner and features an exquisite 1/12 model of Abraham Lincoln's Springfield home.

Today, the IBC Lincoln Collection exceeds 80,000 pieces and is available to the public during normal weekday hours. *(Appointments are recommended)*

The Team

Model Construction and Project Director

Model construction will be performed by a group led by principal model builder, Dr. Wayne Wesolowski, who will also act as project director.

Project Coordinator

Mary Cay Wesolowski will serve as a national coordinator, providing a liaison for the working groups, arranging transportation and assuming responsibility for contractual arrangements with exhibit sites, advertising and local disbursements.

Administrative Liaison

Sylvia Leeseberg, administrative assistant to Dr. Robert Preston, IBC provost, will assure that the project is conducted in accordance with college policy, will update Dr. Richard Becker, college president and charter member of the Lincoln Group of Illinois, and Dr. Preston on the progress of the Lincoln Train exhibit.

Historical Integrity

Dr. Philip Bean, professor of history at IBC and executive secretary/treasurer of the Lincoln Group of Illinois, will act as historical consultant with the responsibility for research and technical accuracy regarding military dress, funeral custom, as well as preparing materials for distribution during the tour.

Advisory Committee

To provide direction and insight for all aspects of the project, an advisory committee has been created. D. Ray Wilson, author, publisher, member of numerous commissions and committees, including the Illinois State Board of Education, will act as chairman. Additional members from the academic world, government, local business and community groups, students as well as Lincoln historians, are drawn from the IBC community, Springfield, Chicago, and a fourth group from the east coast tour areas.

Illinois Governor James Edgar and his wife, Brenda, are the Honorary Chaircouple of the Committee.

Site Administration

Each site will have a local site coordinator responsible for the exhibit during its stay, working with local people and advertising. The National Model Railroad Association will assist with volunteers in each city.

Funding

Lead by a $25,000 initial grant from the Robert R. McCormick (Tribune) Foundation, funding is sought from both public and private sources.

Financial Administration

Illinois Benedictine College will provide program financial administration through the Office of Grants, Colleen Sehy, director.

Timetable

A construction time of three years is anticipated allowing for the beginning of the tour to coincide with the 130th anniversary of Lincoln's death in 1995.

THIS MODEL... *is an example of the quality and detail involved in a Wayne Wesolowski train exhibit. This is a steam locomotive being repaired in the 1940's showing all interior details. It was meticulously researched from an actual engine for the National RR Museum, Green Bay, Wisconsin.*

For more information, contact:
Wayne Wesolowski or Sylvia Leeseberg
Illinois Benedictine College
5700 College Road
Lisle, Illinois 60532
(708) 960-1500

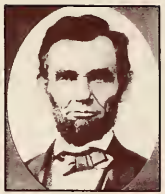

The Lincoln Train

Library of Congress

is coming...

Illinois Benedictine College

Site Administration

Each site will have a local site coordinator responsible for the exhibit during its stay, working with local people and advertising. The National Model Railroad Association will assist with volunteers in each city.

Funding

Lead by a $25,000 initial grant from the Robert R. McCormick (Tribune) Foundation, funding is sought from both public and private sources.

Financial Administration

Illinois Benedictine College will provide program financial administration through the Office of Grants, Colleen Sehy, director.

Timetable

A construction time of three years is anticipated allowing for the beginning of the tour to coincide with the 130th anniversary of Lincoln's death in 1995.

THIS MODEL... is an example of the quality and detail involved in a Wayne Wesolowski train exhibit. This is a steam locomotive being repaired in the 1940's showing all interior details. It was meticulously researched from an actual engine for the National RR Museum, Green Bay, Wisconsin.

For more information, contact:

Wayne Wesolowski or Sylvia Leeseberg
Illinois Benedictine College
5700 College Road
Lisle, Illinois 60532
(708) 960-1500

Compliments

WASHINGTON STATE UNIVERSITY
LIBRARY
Pullman Washington 99163

Dr. Earle Connette
Librarian and Chief
Manuscripts - Archives Div.

Finished 15 Funnel Form

THE MONON

Civil War

Earle Connette

Right from the outset, the Great Lakes and the Ohio River as routes of commerce were vitally important to the Monon, Indiana's first big business. This was especially true of the river that gave it an on-line connection with the Mississippi River and the gulf. When the two were connected by New Albany & Salem rail in 1854, President James Brooks little realized how very important the railroad would become in a civil war that lay seven years ahead.

From the beginning of the war in 1861, streams of military freight and war-time traffic moved over the tracks. Vast stores of food stuffs and other supplies were stored at Jeffersonville and New Albany. These moved south over the L&N and down the Ohio and Mississippi rivers. Revenue from military freight would have been greater had there been sufficient rolling stock. An attempt to reduce this shortage was made in a contract with the Michigan Central Railroad to rent seventy-five cars for two years. But this was only partial relief, and beside, use of these cars was restricted to the line between Lafayette and Michigan City. However, this arrangement released most of the LNA&C cars for use on the Southern Division. As the demands of war increased, a more extended contract was made with the Michigan Central. It was agreed September 1, 1861 that the MC should provide all freight and passenger service on the Northern Division for fifty per cent of the gross earnings. The LNA&C agreed to keep the road and bridges in good running repair. This was, for the time being, a fortunate arrangement since it now was somewhat possible to meet the demands of the War Department and the public.

Passage of troops greatly added congestion. These trains carrying military personnel ran in long sections, frequently following each other in rapid succession. Some trains were of such length that three always-scarce locomotives had to be used - at each end and in the middle. The limited number of passenger

cars owned or rented by the LNA&C was sorely inadequate, so livestock cars were provided with temporary seats. This was done to such an extent that the railroad felt required to notify the public it was unable to supply carriage "owing to so many freight cars engaged in passenger service." After the close of the war the LNA&C was still overburdened carrying returning soldiers to their homes in Indiana and in other states to the north and west.

These troop trains usually carried a band that played bright military music when passing through or stopping at towns. Crowds gathered at the stations to see the soldiers pass or to see those of the neighborhood entrain amid vigorous patriotic demonstration.

By military definition, the raid into Indiana by cavalry troops under the command of Confederate General John Hunt Morgan is an incident, but to contemporary Hoosiers it was a personal and exciting event. The sole military action in Indiana, the raid certainly was an expensive chapter in the life of the LNA&C! A Mexican War soldier and peace-time Lexington, Kentucky businessman, the bold and dashing Morgan carried out his mission cleanly and effectively and escaped Indiana with impunity.

In both Indiana and Ohio, residents in small towns and on isolated farms experienced a time of self-inflicted terror that often approached the comical in its absurdities. The 200 citizens of Fredericksburg were thrown into a panic one night when a charivari party serenaded newlyweds with horns and tin pans.

The entire population ran helter-skelter in their night clothes to hide in the cornfields until daybreak. As Bennett Henderson Young of Louisville, an officer under Morgan and later a lawyer and a historian put it in his Confederate Wizzards of the Saddle, the raiders in gray were pictured as "real sure enough devils, horns, hoofs and all." Even rhyme was put under conscription to help tell how awful Morgan's men were.

> I'm sent to warn the neighbors, he's only
> a mile behind;
> He's sweeping up the horses, every horse
> that he can find.
> Morgan, Morgan, the raider, and Morgan's
> terrible men,
> With Bowie knives and pistols are galloping
> up the glen.

Morgan's force of 2,000 crossed the Ohio River on July 8, 1863 from Brandenberg in direct and explicit violation of orders issued by General Braxton Bragg. The raiders proceeded immediately to Corydon where they met ineffective resistance from a small contingent of militia. The town was looted and tribute of $300 was laid on each of the two stores and $700 on each of the two mills. On leaving Corydon July 9, Morgan sent the larger part of his men north to Greenville in Floyd County and thence to Palmyra. The remainder proceeded northwest, swooped into Paoli and plundered it!

> They swooped into Paoli,
> Assembled on the Square;
> We'll take what we want they said,
> So don't resist and the rest we'll spare.

Morgan probably intended that this part of his force should proceed from Paoli to Mitchell where the Ohio & Mississippi Railroad crossed the LNA&C, and where both could be damaged in one fell blow, but there is no account of any destruction of railroad property at Mitchell, nor at Orleans.

Leaving Paoli, this detachment joined the other body near Salem. The troopers entered the town at a gallop, yelling and flashing blades, at 10:00 A.M., July 10. Salem was already wild with a bedlam of churchbells and shrieking whistles. Here, tribute was levied on businesses with the promise that if such were forthcoming the town would not be burned. The stores were thoroughly pillaged and, as elsewhere, many horses were taken to replace jaded mounts that were then destroyed. At Saltillo, a man named Wiley Elliott, owned four exceptionally fine horses and a beautiful covered wagon. This citizen defied the raiders whereupon his wagon was burned and his horses taken anyway. It is recorded that the redoubtable Morgan was present in person at the sack of Salem. According to newspaper accounts, he courteously promised on his hasty departure that he would visit the town again at a future date.

Basil Duke, a brother-in-law of Morgan and one of his officers, later recorded that "the pillage at Salem was a celebration aimed at paying off all scores that the Federal Army had chalked up in the South. Nothing short of mass courts-martial would have been

effective on that hot July day. The troopers literally cleaned out every dry goods store, saddle shop, saloon, and liquor supply." The mad celebration was stopped by Morgan's order to move out and the raiders vanished as quickly as they had come, leaving Salem its one day of Civil War to be talked about for years to come.

While Salem town escaped the more violent losses of war, the LNA&C was not so fortunate. Several hundred yards of track were torn up, water tanks and bridges destroyed, and the new depot burned. A favorite method of delaying repair was to place the light rails on intense fires of crossties, warping the rails and making them useless. This the raiders did. Sidings up and down the line had to be taken up for replacement on the main. Telegraph lines were cut and escape routes blocked to prevent messengers sounding the alarm. Freight trains were suspended for five days. Passenger trains did not run for three days at a cost of at least $1,200 per day. It cost $2,000 to build temporary bridges, culverts, and water tanks and the entire physical damage to the road and buildings was estimated and sworn to by competent persons at $22,726. Taking into account the canceled trains and salaries of idled employees, the loss businesswise was estimated to be at least an additional $20,000. After the war was ended, the government paid in full for the physical damage.

Morgan did not tarry at Salem because Union forces were known to be on the way. One contingent, made up of men from

Lafayette and nearby counties, were ordered to move southward over the LNA&C. On reaching Bloomington the train halted, no one knowing if the track south was still intact, nor did anyone know the whereabouts of the Confederate force. The soldiers left the train and scattered over the town. They were told the engineer would blow the whistle as a signal to bring them back in time for departure. But the soldiers apparently were not content with this assurance, and when they were recalled it was discovered that all coupling pins had been withdrawn and hidden. After these were retrieved, the train got under way and proceeded slowly, with scouts ahead on handcars. When the train reached Orleans, the citizens spread a generous feed and the band played on. What then happened is not recorded but it seems probable that this contingent became a part of the other forces mustered to pursue Morgan eastward.

Certain it is that the Confederate leader moved on, crossing the Jeffersonville Railroad at Vienna in Scott County, burning bridges and inflicting much other damage. At Vernon and Dupont in Jennings and Jefferson counties, there was great damage to the Madison & Indianapolis Railroad. The Ohio & Mississippi Railroad suffered extensive damage as the raiders moved toward Ohio. There at Libson, the war's farthest northern Confederate penetration, the force was scattered and Morgan was captured July 26, only to escape November 27, return to the South and continue his military service before being killed in a gooseberry patch, clothed in his

nightshirt, nigh a year later at the age of thirty-nine on September 4, 1864 at Greenville, Tennessee, the home of Andrew Johnson, soon to become the seventeenth President of the United States.

Then, almost eight months later to the day, came the surrender at Appomattox Court House April 9, 1865 and the horrible war was ended. But an event that became a great tragedy lurked in the hearts of a band of revengeful evil conspirators. John Wilkes Booth fatally wounded President Abraham Lincoln at Ford's Theatre April 14, and Lincoln died the next day.

After lying in state in the Capitol, funeral services were conducted in the White House and Lincoln was then taken home.

Preceded by a pilot locomotive with traveling engineer and firemen and a caboose with a supporting traveling crew, the Lincoln exequial train of nine immaculate new cars left Washington at 8:00 A.M., April 21. The locomotive and all cars were draped in mourning throughout the journey to Springfield. The train stopped at Baltimore, Harrisburg, Philadelphia, New York, Albany, Buffalo, Cleveland, Columbus, Indianapolis, and Chicago. This 2000-mile journey took twelve days. At each of the scheduled stops, the body lay in state and thousands passed the open casket, paying respect to their deceased leader. Along the line, solemn and weeping people were at every town, village, whistle and flag stops, and wooding and water stations. In the countryside,

grieving people stood beside the track bidding farewell to the train that disappeared in the distance.

The day before arrival at Indianapolis, the body lay in the retunda of the Capitol at Columbus. The train departed that place at 8:00 P.M., on what was then the Columbus & Indianapolis Central Railway - later the Pennsylvania. Arrival in Indianapolis was at 7 o'clock the next morning, Sunday April 30, and the casket was taken reverently to the State House and there placed on a noble catafalque. Indiana had been Lincoln's home from the time he was seven until approaching his twenty-first birthday. He had always received strong Hoosier political support and when in the state enroute to or from Washington was given much ovation. Now the expressed affection and respect was more pronounced than ever. Rain that fell continuously did not deter a multitude from turning out en masse. Present was a Kentucky delegation headed by Governor Thomas E. Bramlette. Shortly before midnight the body was taken to the Union Depot and entrained for Chicago.

Governor Oliver Hazard Perry Throck Morton and his suite, and a group of dignitaries, had met the funeral train at Richmond and remained aboard as far as Michigan City.

Although this sad trek has been described in detail in many accounts of Lincolniana, the railroad operational facets have been overlooked or ignored. In the case of the Monon, extant records document the honored role of the railroad between Lafayette

and Michigan City - another Civil War chapter in its history.

The funeral train left the Union Depot at Midnight over the Lafayette & Indianapolis Railroad, was transferred to the Monon track at Lafayette Junction, and arrived at Lafayette at 3:45 A.M., May 1. Even at this early hour a large crowd had gathered at the station and a hundred or so lined the streets down which the track ran. The train moved by slowly, the whole scene dimly lit by bonfires kindled at intervals. It arrived at Michigan City at 8:35 A.M., where a brief stop was made with the funeral car spotted under a draped memorial arch that had been erected for the occasion.

The good women of the city served a hot breakfast of corn-fed ham, bacon, eggs, fried potatoes, gravey, bisquits, and berry pie. There was milk, coffee, English and sassafras tea. Tables were spread for four hundred people, including a delegation from Chicago.

After this traditional Hoosier hospitality, the train proceeded on its way, reaching Chicago at 11 o'clock over the tracks of the Michigan Central and Illinois Central railroads from whence, after two days, it would go to Springfield over the Chicago & Alton Railroad.

From Lafayette, the train traveled slowly - 25 miles per hour. The published timetable and special regulations for this carriage were issued by the Director and Manager of Military Railroads, Brevet Brig. Gen. D.C. McCallum. The train departed each station ten minutes behind the pilot. It passed through towns with tolling

bell at a speed not exceeding five miles an hour. Telegraph offices were kept open during the entire passage; when a station was cleared the operator at once gave notice to the next station up the line. The pilot was not permitted to pass any station without first getting information of the funeral train having passed the last station, coming to a full stop if necessary.

An attended signal was shown at every switch and bridge, and at the entrance upon every curve. Each attendant personally had to know that all was safe. The track signal from Lafayette until broad daylight was a white light and from that time to Michigan City, a draped white flag. During darkness the pilot carried red markers and a draped American flag during daylight. Both the pilot and funeral train had absolute right to the line during this passage; opposing trains were sided.

Eighteen sixty-five was an important year in the life of the LNA&C. A new era began - an era of successful expansion, development, and refinement that also was at once an era of trial and trouble. Next, the story of the Monon System - a beloved contributing participant in the history of Indiana. A first-class public carrier (spending annually more than $1,000,000 for operations), it inspired and firmed Hoosier tradition and legend in prose, poetry, and song.

Abraham Lincoln's funeral train

Featuring drawings of the car *United States* and the locomotive *Nashville*

BY WAYNE WESOLOWSKI

The assassin's bullet that ended the life of our 16th president also began one of the epic railroad journeys in history – that of Abraham Lincoln's funeral train. Leaving Washington on April 21, 1865, it wouldn't reach Springfield, Ill., for 14 days, and moved through most of the major northern cities. Lincoln was finally laid to rest on May 4, 1865, in a "quiet place" as he had requested.

At each city on the route, the train stopped, the coffin was removed, and huge formal processions brought Lincoln's body to state capitols and city halls. There, for hours, thousands of weeping citizens, often twelve abreast, filed by for a glimpse of the open coffin.

Since there were no electronic media to deliver instant coverage, the only way for the average citizen to participate was to come trackside. Floral arches stood over the tracks in many towns.

The final journey

The route retraced Lincoln's inaugural trip, excluding Cincinnati because of Southern sympathizers and Democrats there. The military, who could still demand control of the railroads, executed the trip with precision. Guards were required at all high locations and strategic points. Turnouts were spiked in place. The train had rights over all other traffic, which would halt one hour before the special's arrival.

Several locomotives were used on the trip. Locomotive design was still in its infancy, there were few motive power standards, and most engines stayed close to their home shops.

The Cleveland, Columbus & Cincinnati RR's *Nashville* was one of the more spectacular engines used on the route. Constructed in 1852, it featured canted cylinders

Ed Bunting

Wayne Wesolowski's model of the *Nashville*, a classic 4-4-0 American, clearly shows the unusual valve gear and the whistle mounted atop the bell hanger. The flags at the front of the locomotive are replicas of those used during the funeral.

Library of Congress

The Cleveland, Columbus & Cincinnati locomotive *Nashville* featured three pictures of Lincoln and two specially designed flags with a large central star for the president and smaller stars for the states in the union. The picture was taken in Cleveland.

Special timetables issued by railroads along the route informed the public of the funeral train's schedule. The timetables were a citizen's primary way of knowing when the train could be seen.

Abraham Lincoln's funeral train

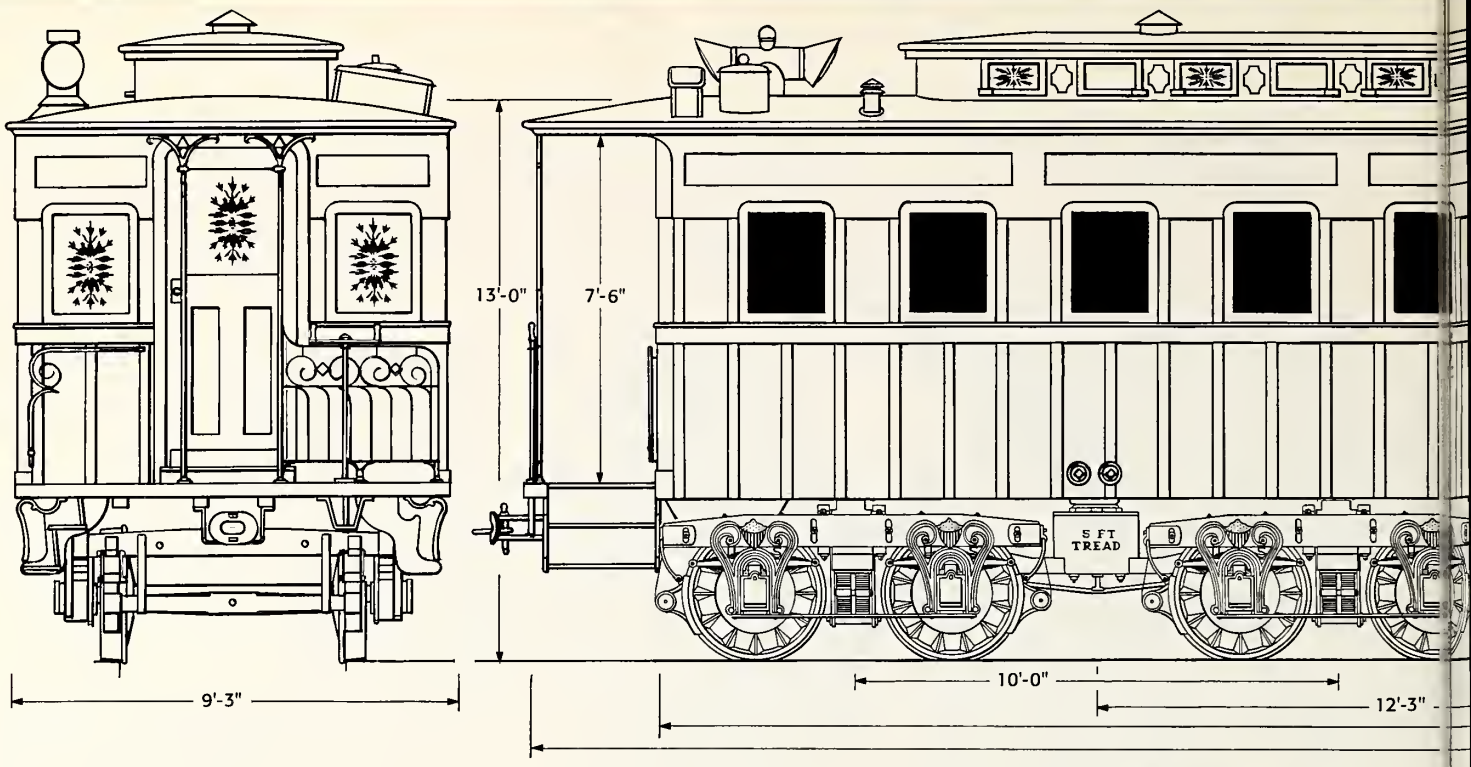

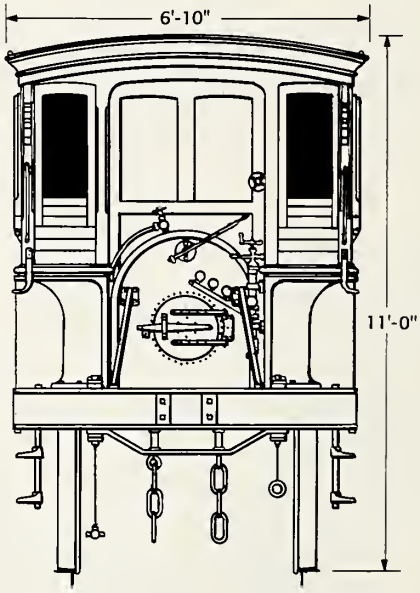

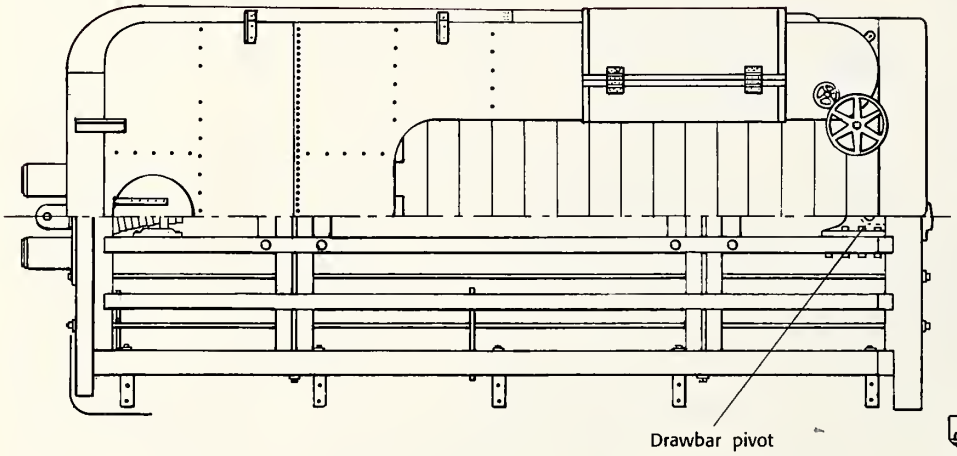

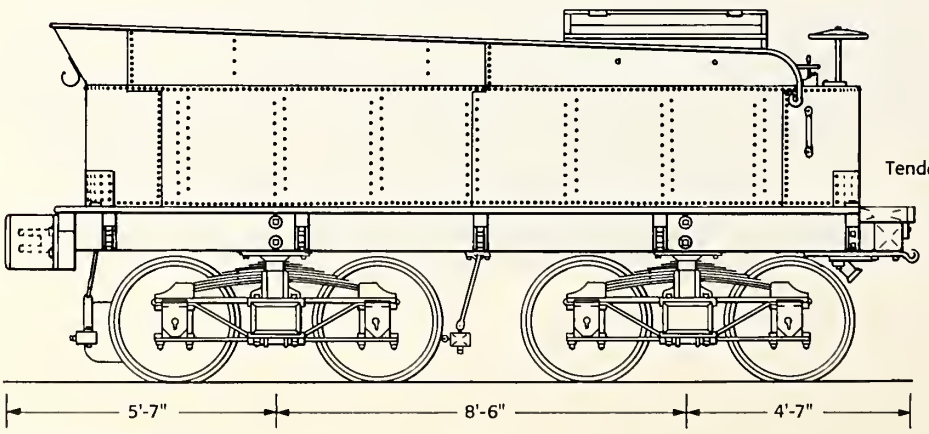

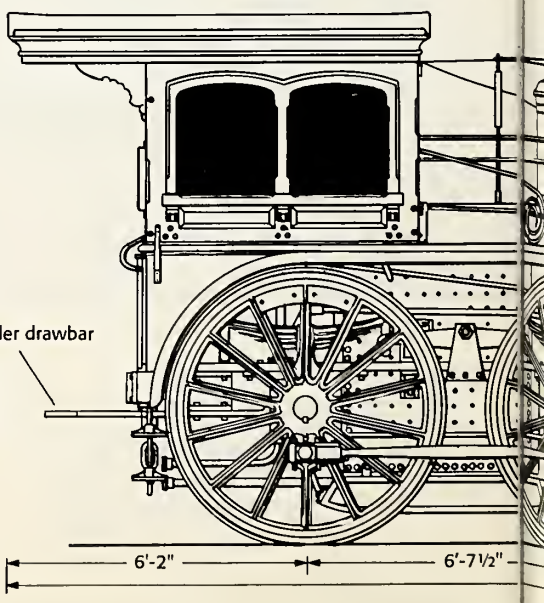

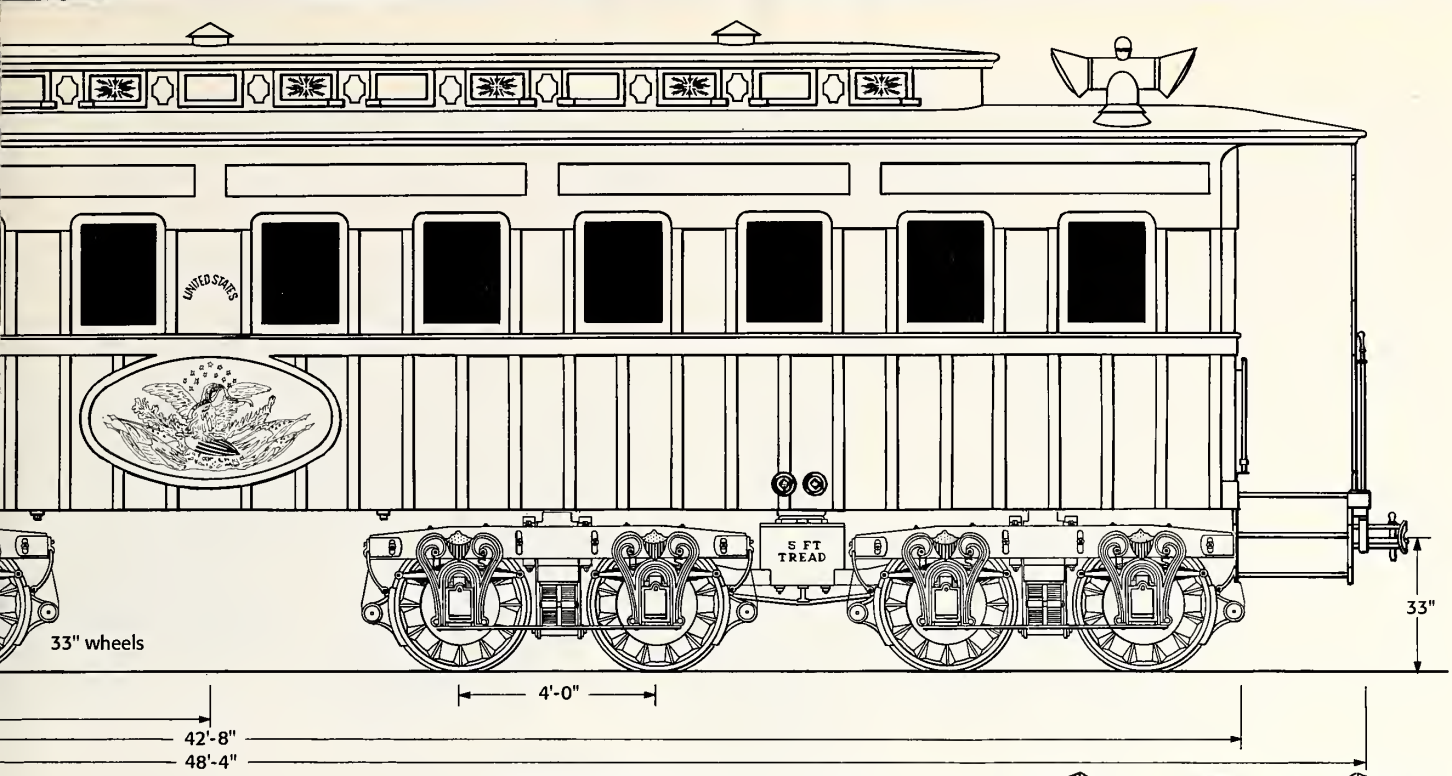

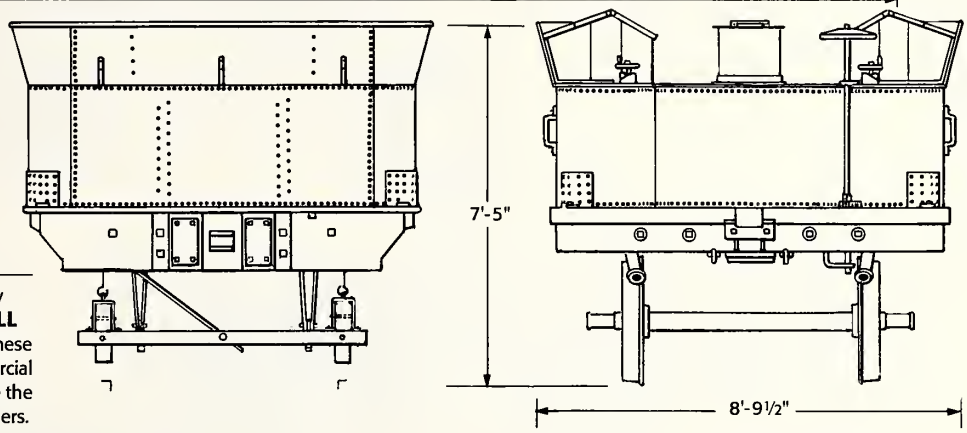

Drawn for MODEL RAILROADER Magazine by
J. M. HAINES AND HAROLD W. RUSSELL
Magazine purchaser may have photocopies of these drawings made as an aid to personal or commercial modelmaking or tool design, but does not have the right to distribute copies of the drawings to others.

O scale, 1:48

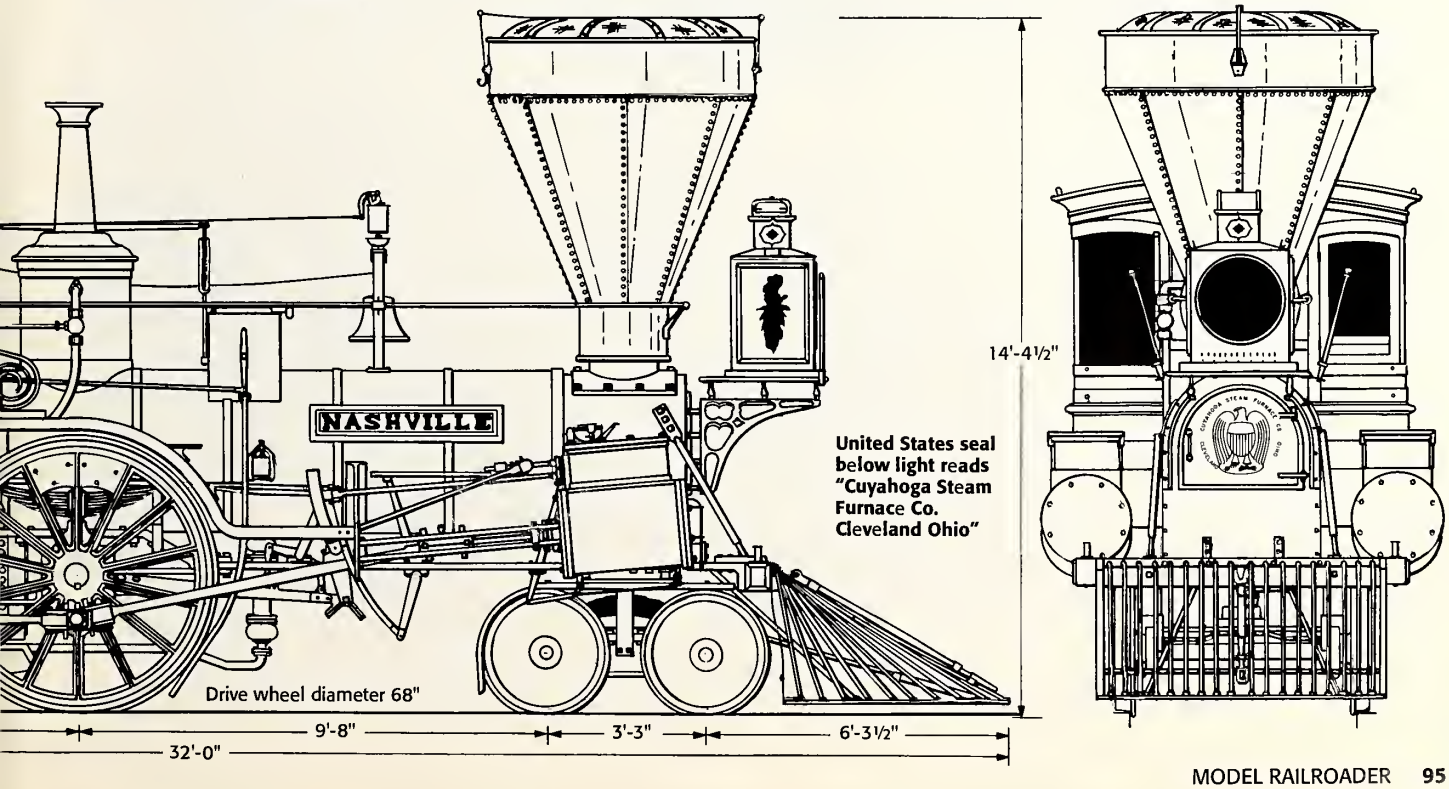

This official government builder's photo of the presidential car was taken in front of the car shops of the Military RR System in Alexandria, Va., where the car was built.

Wayne Wesolowski with his pride and joy, the completed 1" scale model car *United States* in full bunting.

Ed Bunting

and Rogers variable-cutoff valve gear, driven by six eccentric cranks on the front driving axle.

The funeral car

A special car, built in 1864 but never before used, carried Lincoln's body. Perhaps following the custom of design for European royalty, the *United States* was one of the most opulent cars of its time. It included 16 wheels for a smooth ride, rounded monitor ends, fine woodwork, upholstered walls, and etched glass windows. While alive, Lincoln may have chosen not to use the *United States* because it was too ornate for his style.

The car contained three rooms for work and sitting, but without cooking and long-term sleeping facilities, it was not suited for long trips.

The large scoop-like devices on the roof are for air movement over simple stoves at the ends of the car. Designed as a "compromise" car, it had extra wide wheel tread for use on both standard gauge and the 5-foot gauge that was common in both the North and South. A large United States crest was painted on the sides of the car – no official presidential seal existed at the time.

End of the line

When the military railroad system was disbanded and returned to civilian control, the *United States* was sold for $6,850 to the Union Pacific RR. After less than eight years of service as an executive car, it was unceremoniously sold to the Colorado Central RR for $3,000. Stripped of interior compartments, it worked as a simple day coach with long wooden benches running along the still upholstered walls. Downgraded to a lowly work car and nearly derelict, the car returned to the Union Pacific in the early 1890s.

Finally the UP sold the car to entrepreneur Franklyn Snow for $2,000. His efforts to use the car as a commercial exhibit in the Midwest met limited success, so he sold the car to former Soo Line president Thomas Lowry.

Lowry restored the Lincoln funeral car and promoted it as the "most sacred relic in the United States" until a grass fire in 1911 destroyed ten residential blocks in the Minnesota community where the car was stored. Few pieces of the car remain today.

Designed for elegance yet never used by its intended rider in life; made a railroad executives' private car, then used by track workers; crafted of the finest materials, yet burned in a grass fire, the *United States* holds a fascinating place in railroad history.

Library of Congress

About the Lincoln Train project

Under the auspices of Illinois Benedictine College, Wayne Wesolowski and his son Steve are completing a 1" scale model of the funeral train. Over 14 feet long, it will include the locomotive *Nashville*, the presidential car *United States*, and a model honor guard lifting the president's coffin from the train and into the ornate hearse used in the funeral. Traveling with the exhibit will be copies of photos, letters, artifacts, and the story of the making of the Lincoln Train.

The exhibit, now four years in preparation, will begin traveling in Illinois in February 1995. Additional projects will include a short educational video tape and a monograph.

Benefactors:

Robert R. McCormick (*Chicago Tribune*) Foundation
American Funeral Service Museum, Houston, Texas

Donors:

Kalmbach Publishing Co.
James S. Copley Foundation
Lincoln National Corporation, Ft. Wayne, Ind.
Santa Fe Southern Foundation
State Farm Mutual Insurance Co., Bloomington, Ill.
Union Pacific Foundation
D. Ray Wilson, Carpentersville, Ill

Contributors:

Accurail, Elburn, Ill.
Badger Air-Brush Co. (Accu-Flex)
Binks Manufacturing Co.
Carstens Publishing Co.
Castolite Co., Woodstock, Ill.
Haines Miniature Machines, Benicia, Calif.
Jarmac Inc.
Rock River (Ill.) Division NMRA
Woodland Scenics
and many other individuals and companies

Buffalo and Erie County Historical Society

The *United States* and the officers' car were probably the only two cars to make the entire trip. The 29 official train guards were awarded the Congressional Medal of Honor for their service, but the award was later rescinded when Congress limited the use of the medal to recognition of extreme valor in combat.

Kitbashing

Ma & Pa idler car X2 in HO scale

An easy way to convert a boxcar into an inexpensive, eye-catching model

BY ALAN F. MENDE
PHOTOS BY THE AUTHOR

In the summer of 1986, while I was in York, Pa., I came upon some maintenance-of-way cars of the Maryland & Pennsylvania RR – the famous Ma & Pa! Among the equipment was an idler car, a converted boxcar with one end cut out to make room for the boom of an adjacent crane car. When a prototype catches my eye, I just have to build the model.

Let's get rolling

I could have gone to great lengths to build an exact replica of X2, but I'm not interested in sinking a small fortune into a model that will ultimately sit on a shelf or in a box. I think you'll agree, though, that this model captures the feeling of the prototype.

The starting point was a Walthers 40-foot single-sheathed wood boxcar.

TOP: Alan Mende added free-standing grab irons, brakes, and other details to his idler car, but, to make the job simpler, you could leave the cast-on details. **ABOVE:** Here's the prototype Ma & Pa car. The open end provides clearance for an adjacent crane car's boom. As the photo shows, the car can also be used to carry spare parts and tools.